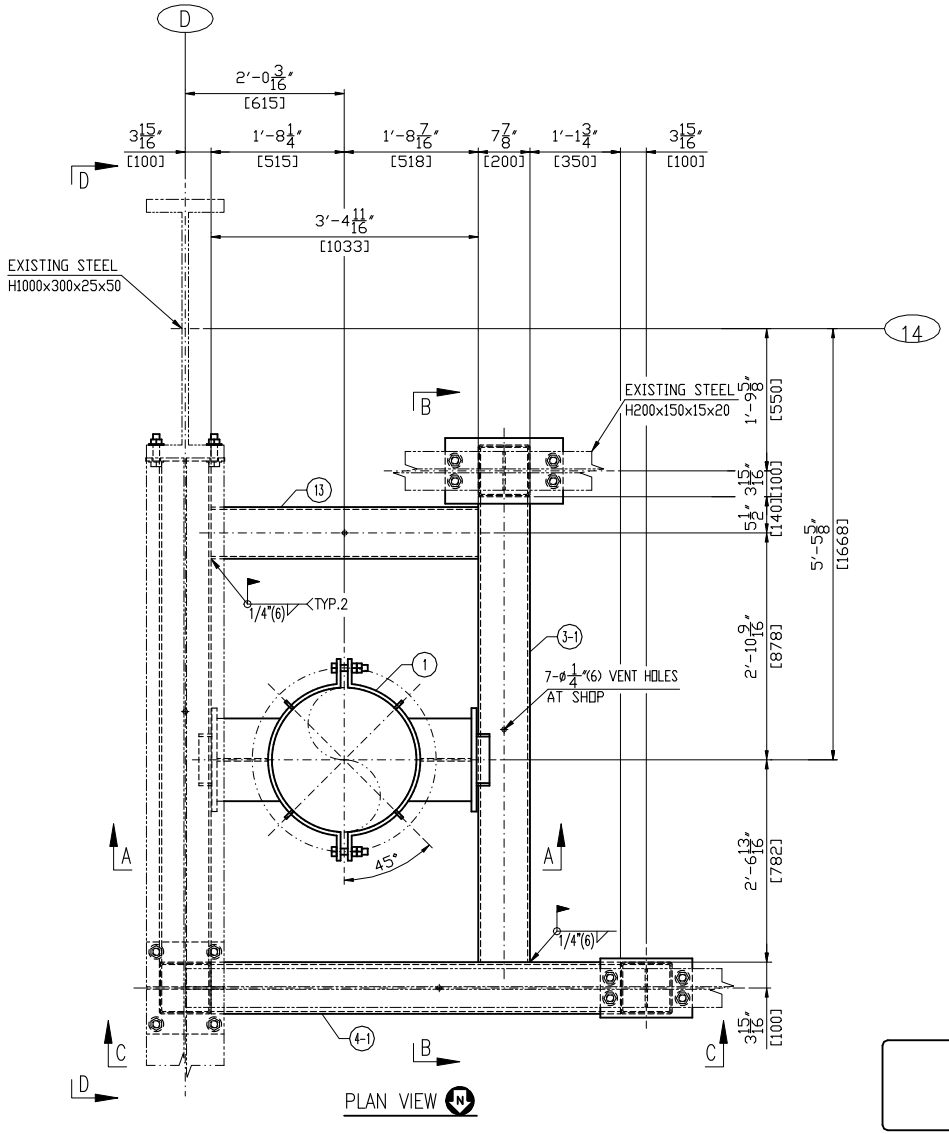

PLAN VIEW

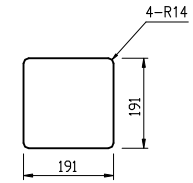

ITEM 3-4 4-4 5-5

ISOMETRIC VIEW

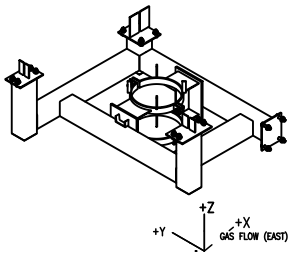

Revision History

Rev	Description	Date	Drawn / Checked By Approved By
–	INITIAL ISSUE	2026-01-21	Drawn J.B.HONG Checked By T.H.KIM Approved By B.L.CHOI

BILL OF MATERIAL — TOTAL WEIGHT : 1452.6 LB — SELECTION NO. 1503 — AREA LEFT

ITEM	DESCRIPTION	TYPE OR SIZE	LENGTH(mm)	LENGTH(IN)	QTY.	MATERIAL	WEIGHT(LB)/UNIT	WEIGHT(LB)/TOTAL	REMARK
1	PIPE CLAMP	PCSDC-550-512			1	A36		324.96	NOTE #2
2	CHANNEL	C200x90x8x13.5	50	1.97	4	A36	3.34	13.36	NOTE #3
3-1	SQUARE TUBE(1-I6)	ST200x200x9	1800	70.87	1	A500 Gr.B		207.54	NOTE #3
3-2	SQUARE TUBE(1-I6)	ST200x200x9	744	29.29	1	A500 Gr.B		85.78	NOTE #3
3-3	PLATE(4-I27-SLOT33-S-HS)	PL12x254x456			1	A36		24.05	NOTE #3
3-4	COVER PLATE(4-R14)	PL6x191x191			1	A36		3.79	NOTE #3
4-1	SQUARE TUBE(1-I6)	ST200x200x9	1583	62.32	1	A500 Gr.B		182.52	NOTE #3
4-2	SQUARE TUBE(1-I6)	ST200x200x9	744	29.29	1	A500 Gr.B		85.78	NOTE #3
4-3	PLATE(4-I27-SLOT33-S-HS)	PL12x229x356			1	A36		16.93	NOTE #3
4-4	COVER PLATE(4-R14)	PL6x191x191			1	A36		3.79	NOTE #3
5-1	SQUARE TUBE(1-I6)	ST200x200x9	1938	76.30	1	A500 Gr.B		223.45	NOTE #3
5-2	SQUARE TUBE(1-I6)	ST200x200x9	444	17.48	1	A500 Gr.B		51.19	NOTE #3
5-3	PLATE(4-I27-SLOT33)	PL12x300x356			1	A36		22.18	NOTE #3
5-4	PLATE(4-I27-SLOT33-S)	PL12x305x457			1	A36		28.95	NOTE #3

PIPING INFORMATION — PIPE SIZE (IN): 22 — PIPE MATERIAL: A335-P11

SUPPORT NUMBER	ISO NO.: 1503			OPER. TEMP (F): 744			INSULATION (IN): 3		
	SUPPORT COORDINATES			DESIGN LOADS (KIPS)			DESIGN MOVEMENTS (IN)		
	X	Y	Z	X	Y	Z	X	Y	Z
1503-PS04	61'-5 13/16'	24'-11 3/16'	93'-2 15/16'	±0	±0	-15.88	-0.19	1.51	0
	18740	7600	28421						

"Z" UP, "Y" NORTH, "X" GAS FLOW EAST

NOTES:

1. PIPE SUPPORT SHOP ATTACHMENTS, GENERAL NOTES, WELD & PLATE DETAILS 1635572-D1S0-3800
2. THIS ITEM WILL BE SUPPLIED BY ENGINEERED PIPE SUPPORT SUPPLIER.
3. THIS ITEM WILL BE SUPPLIED BY STEEL SUPPORT FABRICATOR.
4. PIPE ATTACHMENTS THAT ARE SHOP WELDED ONTO THE PIPE ARE SUPPLIED BY THE PIPE FABRICATOR.
5. BILL OF MATERIAL SHOWN ARE FOR ONE (1) SUPPORT, THERE IS ONE (1) SUPPORT PER UNIT
6. REFER TO DRAWING 1635572-D2S0-3801~3804 FOR TYPICAL SHOP WELDED CONNECTION DETAILS NOT SPECIFIED ON THIS DRAWING.
7. FF* : 1 15/16(50)mm FIELD ADJUST
8. THIS ITEM WILL BE SUPPLIED BY CUSTOMER.

HANGER SETTING DATA(EACH)		TOTAL TRAVEL	- IN
SPRING LOAD	- KIPS	THERMAL MOVEMENT	- IN
HOT LOAD	- KIPS	SPRING RATE	- LB/IN
COLD LOAD	- KIPS	VARIABILITY	- %

UNIT NO.: 11

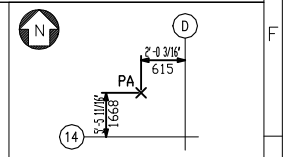

KEY PLAN

NLR
Copyright© GE Vernova and/or its affiliates 2026
All rights reserved. The information herein is proprietary information of GE Vernova and/or its affiliates. Thus, it is being provided with the explicit expectation of restricted use. All persons or legal entities receiving this information shall be deemed by the act of its receipt to have contractually agreed to make no duplications, reproductions of any nature by any means, modifications, disclosures, or use use any portion of this material; except as is expressly authorized in writing by GE Vernova and/or its affiliates.

THIRD ANGLE PROJECTION

Similar To: NONE	Created By: SEONGHWA		MLI No. NONE
First Made For: 1635572	Checked By: VIMAL.V	Approved By: Kim, Chunrae	IEC61355 No. MTC
GE VERNOVA	Document Type: DETAIL DRAWING		Sheet Size A2
	Document Title: PIPE SUPPORT FOR CRH STEAM		
Creation Date 2026-01-21	Drawing No. 1635572-1503-PS04	Revision –	Sheet 1 OF 3

ITEM	DESCRIPTION	TYPE OR SIZE	LENGTH(mm)	LENGTH(IN)	QTY.	MATERIAL	WEIGHT(LB)/UNIT	WEIGHT(LB)/TOTAL	REMARK
5-5	COVER PLATE(4-R14)	PL6x191x191			1	A36		3.79	NOTE #3
6	STIFF. PLATE(R=23)	PL10x66x158			2	A36	1.80	3.60	NOTE #3
7	STIFF. PLATE(R=17)	PL10x68x168			2	A36	1.98	3.96	NOTE #3
8	STIFF. PLATE(R=19)	PL10x143x268			2	A36	6.63	13.26	NOTE #3
9	H.S.B/N/2PW	1"-8 UNC-3"			4	A325	1.63	6.52	NOTE #3
10	H.S.B/N/2PW	1"-8 UNC-2 3/4"			8	A325	1.54	12.32	NOTE #3
11	H.S.B/N/2PW	1"-8 UNC-4 1/4"			4	A325	1.85	7.40	NOTE #3
12	LUG PLATE	PL10x40x150			8	A387-11	1.04	8.32	NOTE #4
13	SQUARE TUBE(1-I6)	ST200x200x9	1033	40.67	1	A500 Gr.B		119.11	NOTE #3

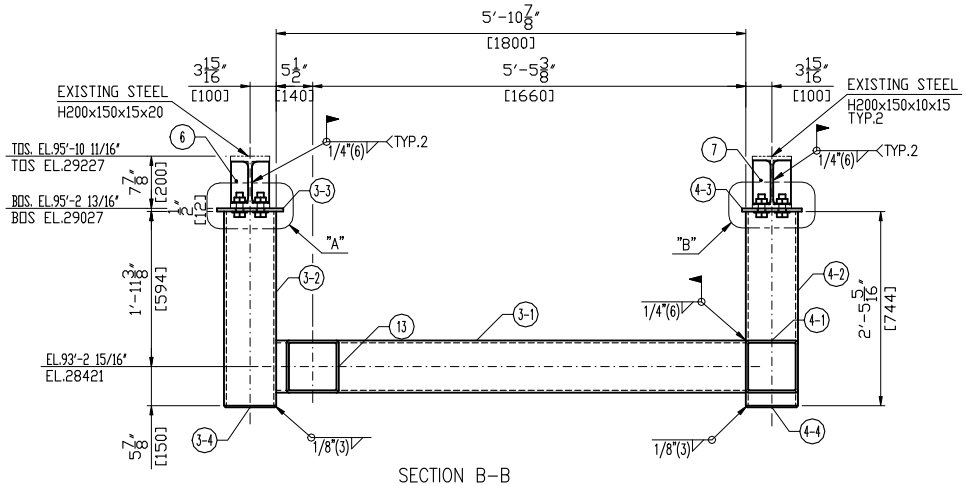

SECTION B-B
LOOKING WEST

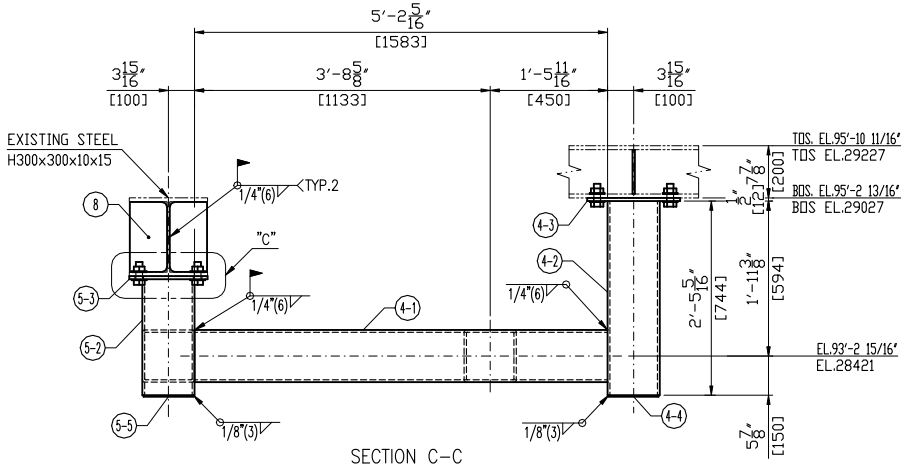

SECTION C-C
LOOKING SOUTH

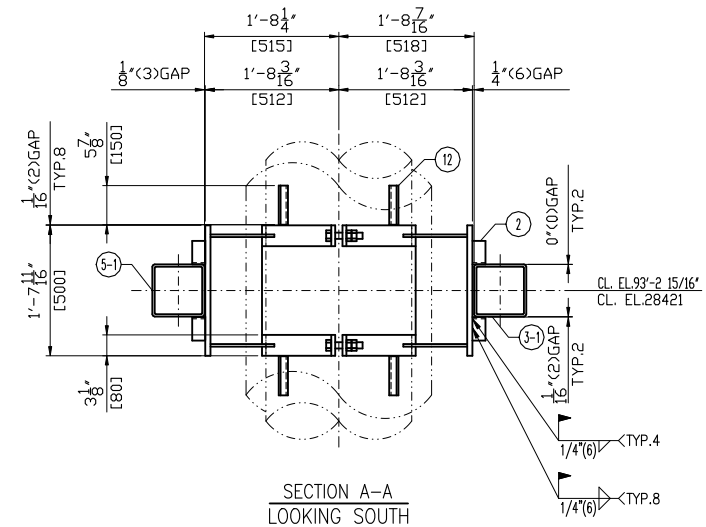

SECTION A-A
LOOKING SOUTH

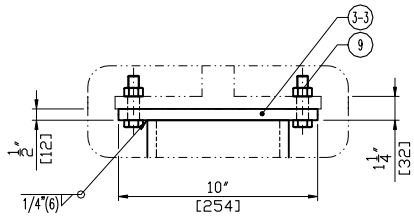

DETAIL "A"

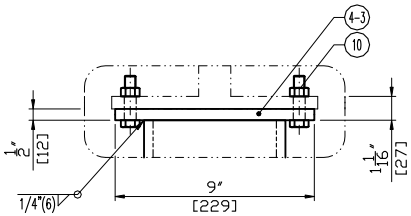

DETAIL "B"

NLR

Copyright© GE Vernova and/or its affiliates 2026
All rights reserved. The information herein is proprietary information of GE Vernova and/or its affiliates.

GE VERNOVA

Document Type: DETAIL DRAWING

Sheet Size: A2

Document Title: PIPE SUPPORT FOR CRH STEAM

Creation Date: 2026-01-21

Drawing No.: 1635572-1503-PS04

Revision: –

Sheet: 2 OF 3

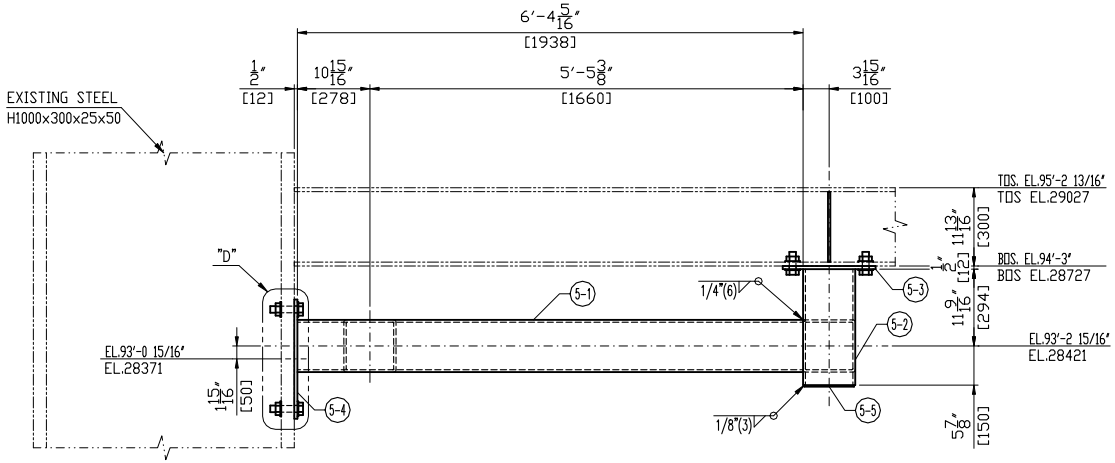

SECTION D-D
LOOKING WEST

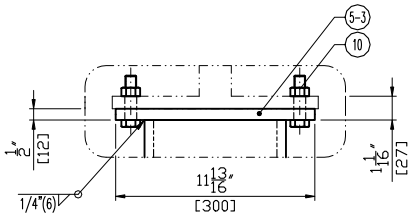

DETAIL "C"

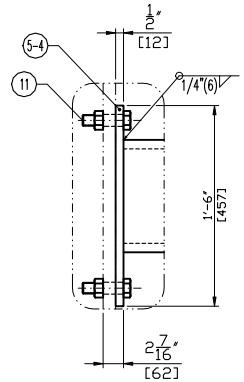

DETAIL "D"

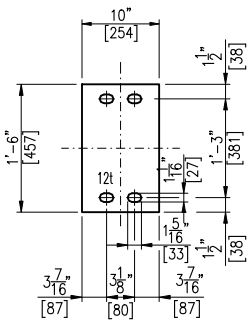

ITEM 3-3

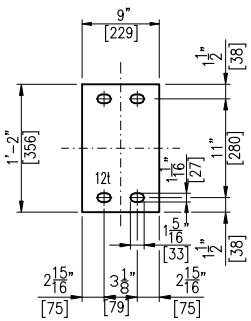

ITEM 4-3

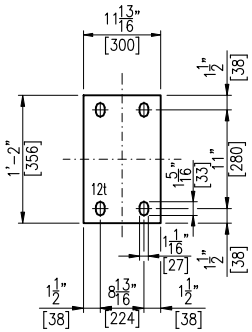

ITEM 5-3

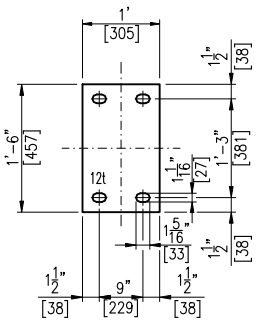

ITEM 5-4

NLR
Copyright© GE Vernova and/or its affiliates 2026
All rights reserved. The information herein is proprietary information of GE Vernova and/or its affiliates.

GE VERNOVA	Document Type: DETAIL DRAWING		Sheet Size A2
	Document Title: PIPE SUPPORT FOR CRH STEAM		
Creation Date 2026-01-21	Drawing No. 1635572-1503-PS04	Revision –	Sheet 3 OF 3